Top Pintle	Classic Marine HL-2242
Top Gudgeon	Classic Marine HL-2226
Bottom Pintle	Classic Marine HL-2238
Bottom Gudgeon	Classic Marine HL-2267

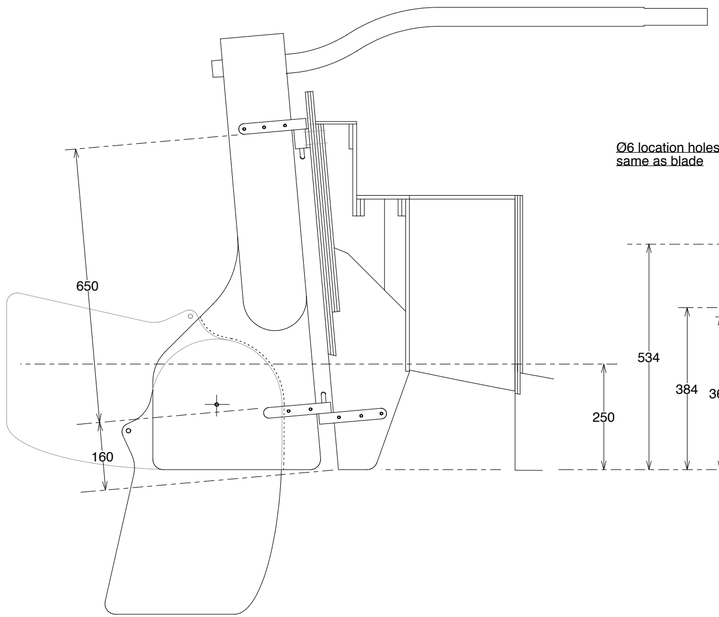

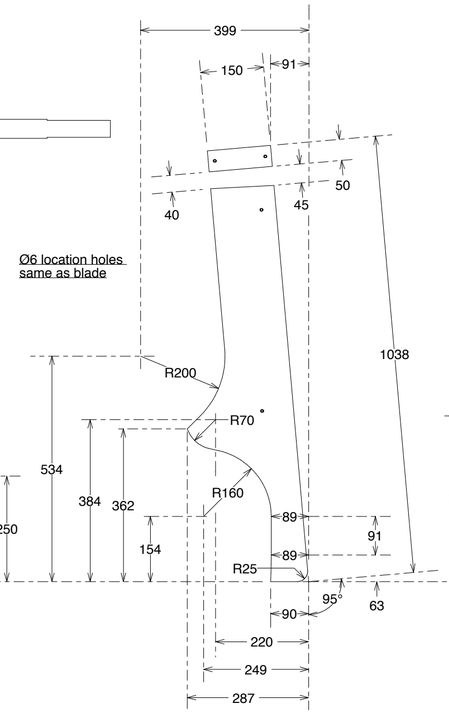

Ø6 location holes
same as blade

Core 12mm ply

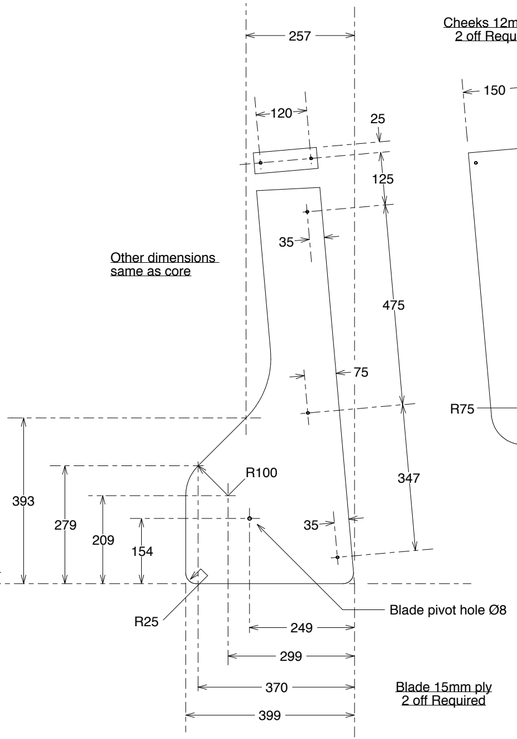

Other dimensions
same as core

Blade pivot hole Ø8

Blade 15mm ply
2 off Required

Cheeks 12mm ply
2 off Required

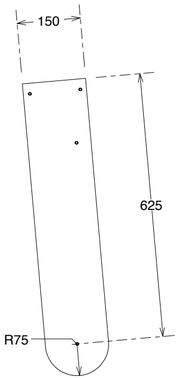

Laminate up at 45 x 45. Taper underside of heel to 40 x 45 to fit taper in rudder and reduce thickness to suit rudder (42mm).

Round up fwd end to Ø35

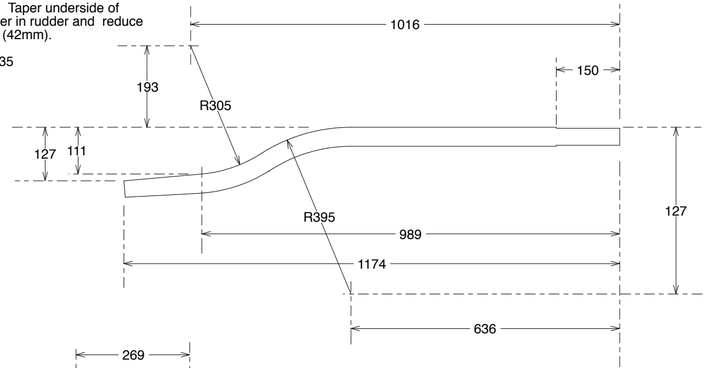

Ø6 location holes
same as blade

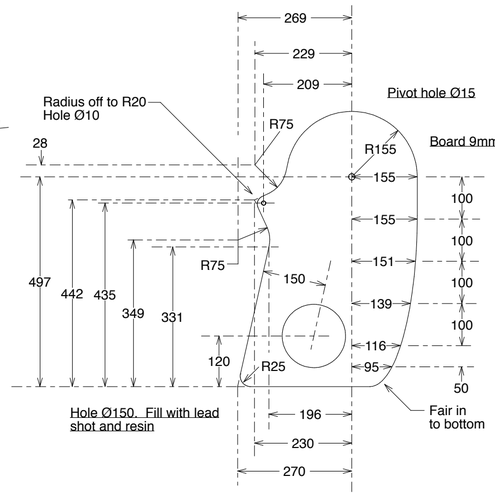

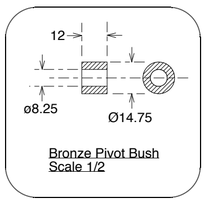

Bronze Pivot Bush
Scale 1/2

Whisstock
boats and boat plans

support@whisstock.com

Design 155

Rudder Components & Tiller

Scale	1/10 & 1/2
Date	21 Sep 2013
Plan No.	155/008/001
Issue No.	01

All dimensions in millimetres unless otherwise noted

© Debenriver Ltd 2013 All Rights Reserved